OESCH GMBH
Adlerstrasse 25
Postfach 23
CH-4312 Magden

Telefon +41 61 841 03 33
Fax +41 61 841 03 30
info@oeschswitzerland.com
www.oeschswitzerland.com

OESCH SWITZERLAND

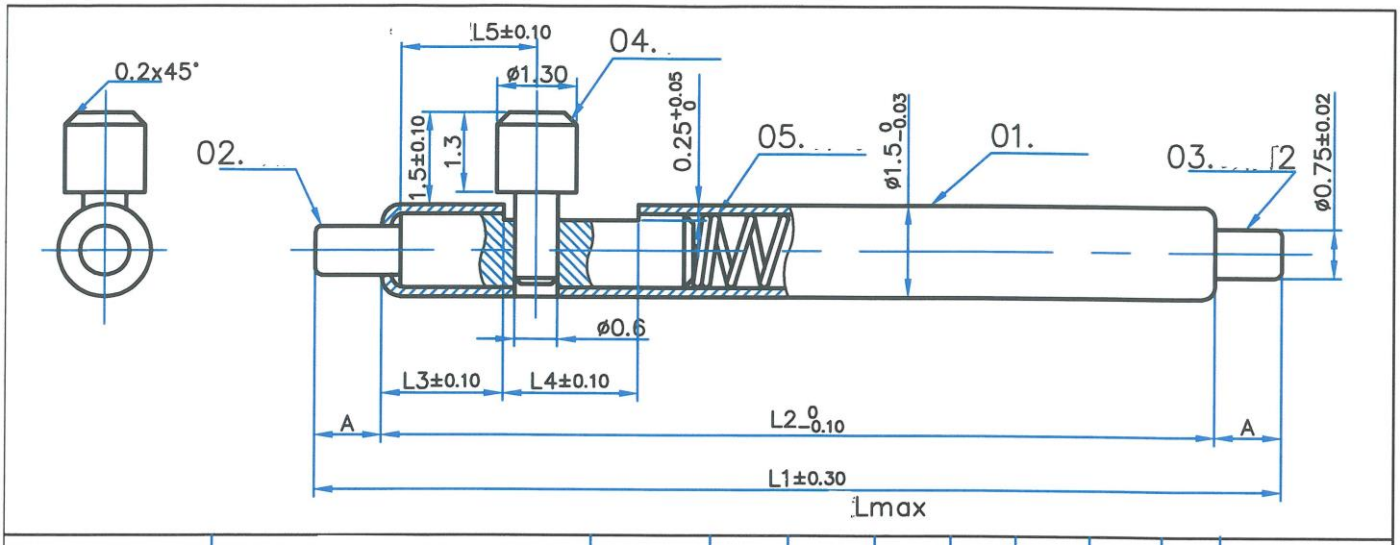

Part NO.	Description	Size	Lmax	L1	L2	L3	L4	L5	A	
42-711-150080-01	KSMS-150S(D1.5) 8mm+0.8x0.75	8mm	8.0	9.3	7.7	1.0	1.7	1.4	0.8	7.9-8.0mm
42-711-150090-01	KSMS-150S(D1.5) 9mm+0.8x0.75	9mm	9.0	10.3	8.7	1.0	1.7	1.4	0.8	8.9-9.0mm
42-711-150100-01	KSMS-150S(D1.5) 10mm+1.1x0.75	10mm	10.0	11.9	9.7	1.0	2.2	1.4	1.1	9.9-10.2mm
42-711-150110-01	KSMS-150S(D1.5) 11mm+1.1x0.75	11mm	11.0	12.9	10.7	1.0	2.2	1.4	1.1	10.9-11.2mm
42-711-150120-01	KSMS-150S(D1.5) 12mm+1.1x0.75	12mm	12.0	13.9	11.7	2.0	2.5	2.4	1.1	11.8-12.2mm
42-711-150130-01	KSMS-150S(D1.5) 13mm+1.1x0.75	13mm	13.0	14.9	12.7	2.0	2.5	2.4	1.1	12.8-13.2mm
42-711-150140-01	KSMS-150S(D1.5) 14mm+1.1x0.75	14mm	14.0	15.9	13.7	2.0	2.5	2.4	1.1	13.8-14.2mm
42-711-150150-01	KSMS-150S(D1.5) 15mm+1.1x0.75	15mm	15.0	16.9	14.7	2.0	2.5	2.4	1.1	14.8-15.2mm
42-711-150160-01	KSMS-150S(D1.5) 16mm+1.1x0.75	16mm	16.0	17.9	15.7	2.0	2.5	2.4	1.1	15.8-16.2mm
42-711-150170-01	KSMS-150S(D1.5) 17mm+1.1x0.75	17mm	17.0	18.9	16.7	2.0	2.5	2.4	1.1	16.8-17.2mm
42-711-150180-01	KSMS-150S(D1.5) 18mm+1.1x0.75	18mm	18.0	19.9	17.7	2.0	2.5	2.4	1.1	17.8-18.2mm
42-711-150190-01	KSMS-150S(D1.5) 19mm+1.1x0.75	19mm	19.0	20.9	18.7	2.0	2.5	2.4	1.1	18.8-19.2mm
42-711-150200-01	KSMS-150S(D1.5) 20mm+1.1x0.75	20mm	20.0	21.9	19.7	2.0	2.5	2.4	1.1	19.8-20.2mm
42-711-150210-01	KSMS-150S(D1.5) 21mm+1.1x0.75	21mm	21.0	22.9	20.7	2.0	2.5	2.4	1.1	20.8-21.2mm
42-711-150220-01	KSMS-150S(D1.5) 22mm+1.1x0.75	22mm	22.0	23.9	21.7	2.0	2.5	2.4	1.1	21.8-22.2mm
42-711-150230-01	KSMS-150S(D1.5) 23mm+1.1x0.75	23mm	23.0	24.9	22.7	2.0	2.5	2.4	1.1	22.8-23.2mm
42-711-150240-01	KSMS-150S(D1.5) 24mm+1.1x0.75	24mm	24.0	25.9	23.7	2.0	2.5	2.4	1.1	23.8-24.2mm
42-711-150250-01	KSMS-150S(D1.5) 25mm+1.1x0.75	25mm	25.0	26.9	24.7	2.0	2.5	2.4	1.1	24.8-25.2mm
42-711-150260-01	KSMS-150S(D1.5) 26mm+1.1x0.75	26mm	26.0	27.9	25.7	2.0	2.5	2.4	1.1	25.8-26.2mm
42-711-150270-01	KSMS-150S(D1.5) 27mm+1.1x0.75	27mm	27.0	28.9	26.7	2.0	2.5	2.4	1.1	26.8-27.2mm
42-711-150280-01	KSMS-150S(D1.5) 28mm+1.1x0.75	28mm	28.0	29.9	27.7	2.0	2.5	2.4	1.1	27.8-28.2mm
42-711-150290-01	KSMS-150S(D1.5) 29mm+1.1x0.75	29mm	29.0	30.9	28.7	2.0	2.5	2.4	1.1	28.8-29.2mm
42-711-150300-01	KSMS-150S(D1.5) 30mm+1.1x0.75	30mm	30.0	31.9	29.7	2.0	2.5	2.4	1.1	29.8-30.2mm
42-711-150310-01	KSMS-150S(D1.5) 31mm+1.1x0.75	31mm	31.0	32.9	30.7	2.0	2.5	2.4	1.1	30.8-31.2mm
42-711-150320-01	KSMS-150S(D1.5) 32mm+1.1x0.75	32mm	32.0	33.9	31.7	2.0	2.5	2.4	1.1	31.8-32.2mm

OESCH	**Artikel**	5006			**Zeichnung**	UN	**Datum**	19.01.2006
	Zeichnung #	1	**Einheit**	mm	**Bestätigung**	OE	**Datum**	20.01.2006
	Material	Edelstahl 316L / Edelstahl 304 (Feder)						